Lytecaster® Recessed Downlighting **1004F18ES**

5" Aperture Lytening® 1 Lt 18W Quad/Triple Tube Compact Fluorescent IC Frame-In Kit

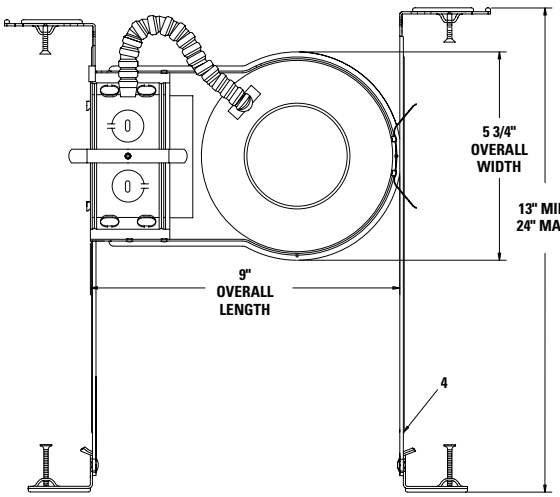

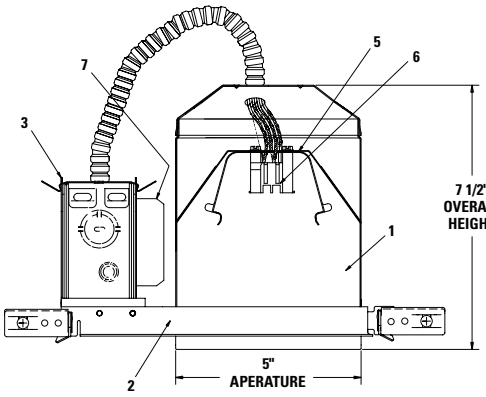

ENERGY STAR

Ceiling Opening 5 3/8" diameter

Complete Fixture consists of Reflector Trim & Frame-In Kit. Select each separately.

Frame-In Kit			**Reflector Trims — See Individual Reflector Trim Specification Sheets**						
	Voltage	Lamp	Open Downlight					Enclosed Diffusers	Wall Washer
			Anodized Reflector	Anodized Cone	Satin Cone	Baffles	Basic White		
1004F18ES **1004F18ESN**	**120V**	**18W Quad or Triple Tube**	**1045** **1046** **1046CD**	**1012** **1012NM** **1013** **1013BK** **1013BKNM** **1013CD** **1013CDNM** **1013NM** **1013WH**	**1008** **1008NM** **1010** **1010NM**	**1005** **1005BNM** **1005NM** **1005WH** **1076** **1076WH**	**1071**	**1021** **1024** **1078** **1177LX****	**1035** **1035WH** **1085** **1095** **1096** **1096CD**

** Use Triple Tube Lamp Only.

Features

1. **Housing:** .032" (#20 ga.) UL listed for direct contact with thermal insulation. Allows installation in ceilings up to 2" thick. Can be removed for access to junction box, ballast and ceiling plenum. AirSeal® housing minimizes air leakage to less than 2 CFM at 1.57 PSF (or 75pa), which complies with Model Energy Code (Section 602.3.3) and Washington State Energy Code (Section 502.4) and reduces heat loss and condensation in ceiling.
2. **Mounting Frame:** .048" (#18 ga.) galvanized steel. Locks into position along length of mounting bars with locking spring and bendable slot. (3) slots 90° apart simplify alignment.
3. **Junction Box:** 2" X 4" X 3 1/2" (22 cu. in.) .032" (#22 ga.) galvanized steel. UL listed for branch circuit wiring supplying connected luminaires. Integral cable clamps permit attachment of non-metallic (#12 or #14 ga.) Romex® cable without tools or additional connectors.
4. **Mounting Bars:** .059" (#16 ga.) galvanized steel. Bars pivot for easy attachment and wire-in below ceiling line. Bars extend to accommodate 16" to 24" O.C. joist spacing. Bars can accommodate 9" O.C. joist spacing after a slight field modification (see Instruction Sheet). Features integral self-tapping phillips screws for secure attachment to wood or metal construction. Attaches to T-bar ceilings without the need of accessories.
5. **Socket Housing:** Trim retaining spring secures trim to any height on housing wall.
6. **Socket:** (4 Pin,GX24q-2) base, molded thermo-plastic. Pre-wired with #18 AWG leads to junction box.
7. **Ballast:** Electronic 120V, end of life protected, FCC class "B" consumer limits, class "A" sound rating. Energy Star® qualified.

Electrical

Input Watts: 19
Amps: .16
Ballast Factor: 1.0
Power Factor: .97

Electrical (cont.)

Max THD %: 10
Min Start Temp: 0°F/ -18°C

Options & Accessories

AirSeal® Kit: LAS56 (optional)

Note: Use only if factory installed tape or knockouts are removed from vertical adjustment slots in housing wall.

Labels

UL (Type IC Suitable for Damp Locations)
Complies with Air Leakage Requirements stated in the Model Energy Code, California Title 24 and the Washington State Energy Code.

Romex® is a registered trademark of General Cable Industries Inc.
US and Foreign Patents Pending.

Job Information	**Type:**
Job Name:	
Cat. No.:	
Lamp(s):	
Notes:	

Lightolier a Genlyte company www.lightolier.com
631 Airport Road, Fall River, MA 02720 • (508) 679-8131 • Fax (508) 674-4710
We reserve the right to change details of design, materials and finish.
© 2006 Genlyte Group LLC • B0906

LIGHTOLIER®